X-RAY EQUIPMENT

DEL MEDICAL FWFC TUBE STAND

The Floor-wall/foor-ceiling tube stand
feature extensive vertical travel, allowing for a full range of upright positions. The tube stand features electro-magnetic locks and an angulating tube arm for easy and accurate positioning.
The 140 kHu 1.0 mm x 2.0 mm focal spot tube ensures high resolution images. The standard 72” (183 cm) tracks allow for 40” (100 cm) and 72” (183 cm) detector distances

Lead time: Subject to stock availability, transit times and radiation licensing. Estimated shipping date to be provided once the purchase is confirmed

Read More
CODE E-GEN1042
Categories: X-Ray Components, X-Ray Equipment
Tags: CMP, CPI Generator, DEL, generator

MANUAL COLLIMATOR CML 125 - COLLIMARE

Your First Choice for Collimator Needs

- Manual Certified Units
- Non-Certified Veterinarian Units
- Portable Certified Units
- Portable Non-Certified Veterinarian Units
- Mobile Certified Units
- High Throughput Clinical Application Units
- Custom Units
- Collimator Accessories and Add-ons

Lead time: Subject to stock availability, transit times and radiation licensing. Estimated shipping date to be provided once the purchase is confirmed

Read More
CODE E-GEN1020
Categories: X-Ray Components, X-Ray Equipment
Tags: CMP, CPI Generator, DEL, generator

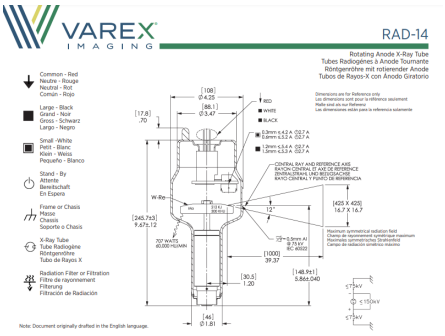

X-RAY TUBE VAREX DIAMOND RAD 14

The RAD-14 is a 3" (80mm), 150 kV,
212 kJ (300 KHU) rotating anode insert specifically designed for general radiographic and fluoro/spotfilm procedures. The insert features a 12° tungsten rhenium molybdenum target and is available in the following focal spot combinations:

0.3 - 1.2
0.6 - 1.2
0.6 - 1.5
IEC 60336

Nominal Anode Input Power:
Small (0.3) - 7.5 kW IEC 60613
Small (0.6) - 32 kW IEC 60613
Large (1.2) - 77 kW IEC 60613
Large (1.5) - 95 kW IEC 60613For the equivalent anode input power of 80 Watts

Lead time: Subject to stock availability, transit times and radiation licensing. Estimated shipping date to be provided once the purchase is confirmed

Read More
CODE E-GEN1083
Categories: X-Ray Components, X-Ray Equipment
Tags: CMP, CPI Generator, DEL, generator

DEL MEDICAL OVERHEAD TUBE CRANE

The OTC tube crane highlights an advanced, technologist-friendly 10.4" touchscreen console providing seamless system integration by displaying tube angulation, SID values, and generator control options. Color-coded movement identification buttons provide optimal precision when setting up views.

Peaceful and effortless movements are controlled by an electromagnetic braking system enabling fast and secure readjustments of the tube head. Its five-tier telescoping column delivers exceptional vertical movement of 71” (180 cm), capable of performing complete head-to-toe radiographic procedures including upright weight bearing and recumbent table top exams.

The OTC Tube Crane comes in 3 different models:

OTC18T

OTC18M

OTC12

Lead time: Subject to stock availability, transit times and radiation licensing. Estimated shipping date to be provided once the purchase is confirmed

Read More
CODE N/A
Categories: X-Ray Components, X-Ray Equipment
Tags: crane, DEL, OTC, overhead, Overhead tube crane, tube, xray

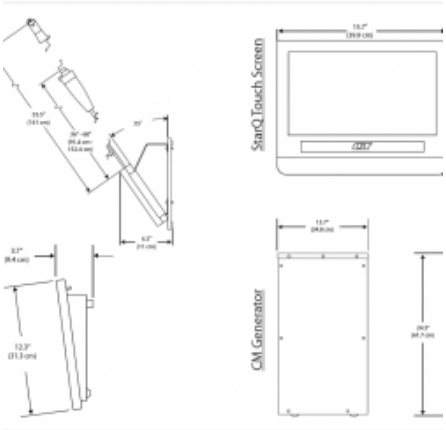

CPI CMP200 X-RAY GENERATOR

The **CMP 200® generator** series offers advanced high quality radiographic capabilities with unmatched performance and reliability resulting in the lowest cost of ownership over the product lifetime. This generator is suitable for film and CR-based radiographic systems and features leading edge computer-based controls to minimize patient dose and maximize image quality while demonstrating excellent reproducibility with user-friendly operator controls.

ATX has factory trained personnel to advise, install and maintain CPI generators.

Generators can be retrofitted into your existing bucky room or included into a new facility.

CM Series Gen

OPTIONS

- Automatic Exposure Control (AEC)
- Dose Area Product (DAP)
- Exposure Hand Switch
- Membrane Control Console
- Mini-Control Console

Lead time: Subject to stock availability, transit times and radiation licensing. Estimated shipping date to be provided once the purchase is confirmed

Read More
CODE E-GEN1016
Categories: X-Ray Components, X-Ray Equipment
Tags: CMP, CPI Generator, DEL, generator

X-RAY COMPONENTS

DEL MEDICAL FWFC TUBE STAND

The Floor-wall/foor-ceiling tube stand
feature extensive vertical travel, allowing for a full range of upright positions. The tube stand features electro-magnetic locks and an angulating tube arm for easy and accurate positioning.
The 140 kHu 1.0 mm x 2.0 mm focal spot tube ensures high resolution images. The standard 72” (183 cm) tracks allow for 40” (100 cm) and 72” (183 cm) detector distances

Lead time: Subject to stock availability, transit times and radiation licensing. Estimated shipping date to be provided once the purchase is confirmed

Read More
CODE E-GEN1042
Categories: X-Ray Components, X-Ray Equipment
Tags: CMP, CPI Generator, DEL, generator

MANUAL COLLIMATOR CML 125 - COLLIMARE

Your First Choice for Collimator Needs

- Manual Certified Units
- Non-Certified Veterinarian Units
- Portable Certified Units
- Portable Non-Certified Veterinarian Units
- Mobile Certified Units
- High Throughput Clinical Application Units
- Custom Units
- Collimator Accessories and Add-ons

Lead time: Subject to stock availability, transit times and radiation licensing. Estimated shipping date to be provided once the purchase is confirmed

Read More
CODE E-GEN1020
Categories: X-Ray Components, X-Ray Equipment
Tags: CMP, CPI Generator, DEL, generator

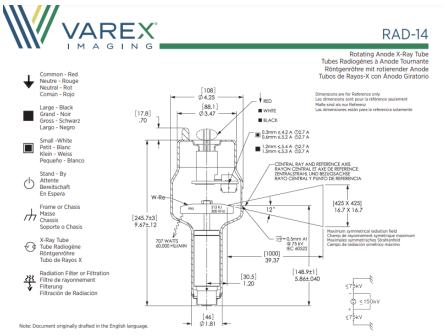

X-RAY TUBE VAREX DIAMOND RAD 14

The RAD-14 is a 3" (80mm), 150 kV,
212 kJ (300 KHU) rotating anode insert specifically designed for general radiographic and fluoro/spotfilm procedures. The insert features a 12° tungsten rhenium molybdenum target and is available in the following focal spot combinations:

0.3 - 1.2
0.6 - 1.2
0.6 - 1.5
IEC 60336

Nominal Anode Input Power:
Small (0.3) - 7.5 kW IEC 60613
Small (0.6) - 32 kW IEC 60613
Large (1.2) - 77 kW IEC 60613
Large (1.5) - 95 kW IEC 60613For the equivalent anode input power of 80 Watts

Lead time: Subject to stock availability, transit times and radiation licensing. Estimated shipping date to be provided once the purchase is confirmed

Read More
CODE E-GEN1083
Categories: X-Ray Components, X-Ray Equipment
Tags: CMP, CPI Generator, DEL, generator

DEL MEDICAL OVERHEAD TUBE CRANE

The OTC tube crane highlights an advanced, technologist-friendly 10.4" touchscreen console providing seamless system integration by displaying tube angulation, SID values, and generator control options. Color-coded movement identification buttons provide optimal precision when setting up views.

Peaceful and effortless movements are controlled by an electromagnetic braking system enabling fast and secure readjustments of the tube head. Its five-tier telescoping column delivers exceptional vertical movement of 71” (180 cm), capable of performing complete head-to-toe radiographic procedures including upright weight bearing and recumbent table top exams.

The OTC Tube Crane comes in 3 different models:

OTC18T

OTC18M

OTC12

Lead time: Subject to stock availability, transit times and radiation licensing. Estimated shipping date to be provided once the purchase is confirmed

Read More
CODE N/A
Categories: X-Ray Components, X-Ray Equipment
Tags: crane, DEL, OTC, overhead, Overhead tube crane, tube, xray

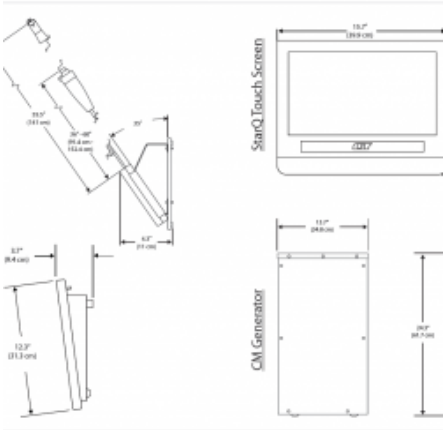

CPI CMP200 X-RAY GENERATOR

The **CMP 200® generator** series offers advanced high quality radiographic capabilities with unmatched performance and reliability resulting in the lowest cost of ownership over the product lifetime. This generator is suitable for film and CR-based radiographic systems and features leading edge computer-based controls to minimize patient dose and maximize image quality while demonstrating excellent reproducibility with user-friendly operator controls.

ATX has factory trained personnel to advise, install and maintain CPI generators.

Generators can be retrofitted into your existing bucky room or included into a new facility.

CM Series Gen

OPTIONS

- Automatic Exposure Control (AEC)
- Dose Area Product (DAP)
- Exposure Hand Switch
- Membrane Control Console
- Mini-Control Console

Lead time: Subject to stock availability, transit times and radiation licensing. Estimated shipping date to be provided once the purchase is confirmed

Read More
CODE E-GEN1016
Categories: X-Ray Components, X-Ray Equipment
Tags: CMP, CPI Generator, DEL, generator